R-410A Refrigerant

UNICOOL Wall Package Units

AIRSYS Variable Speed Precision Cooling with VFD Technology, 7 – 28 kW

- Designed specifically or computer and equipment environments, the system provides a cooling capacity optimized for sensible heat removal.
- Features an integrated free-cooling economizer with seamless changeover and optional partial free cooling
- The new Adaptive Free Cooling feature optimizes free cooling for each building by learning and adapting to each building's heat load and layout. automatically adjusting operation to maximize free cooling efficiency.

Infinite Step Variable Capacity Cooling

- Variable Frequency Drive (VFD) technology rated for 11–12 EER (depending on model) at nominal capacity, and >17 IEER.
- New Synchronized Cooling Mode enables any building with redundant units to achieve even higher year-round EER while maintaining full redundancy.
- Soft Start feature eliminates voltages spikes at compressor startup (allowing for a smaller generator) and minimizing compressor stress during every startup cycle.

EER Comparisons

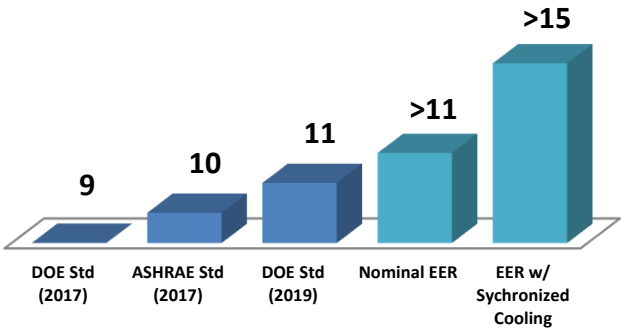

Feature Highlights

Variable Capacity Compressor
Variable Frequency Drive technology enables the compressor to precisely match internal load requirements while minimizing stress associated with ON/OFF cycles.

Integrated Free Cooling Economizer
Standard on all units, the highly configurable economizer provides seamless transitions and variable capacity control, delivering up to 100% of the rated supply fan air volume.

Dual Air Flow Configurations
The bottom supply configuration optimizes efficiency, while the top supply configuration simplifies installation.

Electrically Commutated (EC) Supply Fan
Quieter, more efficient variable speed EC fans are standard across all models, delivering a highly favorable energy efficiency curve compared to conventional AC fans.

Dual Layer Exterior Protection
The galvanized steel exterior, enhanced with a thermoset polymer coating, provides two layers of protection against corrosion.

Extreme Operating Temperature Range
Designed to operate reliably in ambient temperatures ranging from -22°F to 127°F.

Power Monitoring
The Power monitoring feature includes real-time kW measurement as well as 1-hour, 24-hour, and 30-day average power tracking. These metrics can be utilized for predictive maintenance.

Fully Functional Standalone Mode
If communication between the unit and the controller is lost, the HVAC system will continue to operate all functions, including free cooling, mechanical cooling, and heating.

Intertek

AHRI CERTIFIED™ www.ahridirectory.org

AIRSYS Balance the Environment

STANDARD FEATURES

Precise Heat Load Match

Just as an airplane experiences its greatest stress during takeoff and landing, the cooling cycles place the highest mechanical stress on the compressor. The startup of a fixed-speed compressor wears down the contactors, and the associated inrush current accelerates wear on other electronic components.

Even with properly sized units and a correctly programmed minimum compressor run/stop timer, loading and unloading can occur up to one hundred times per day—adding up to more than 30,000 cycles per year. By precisely matching the cooling demand, variable-speed units minimize abrupt compressor loading and unloading, significantly extending the service life and reliability of the entire cooling system.

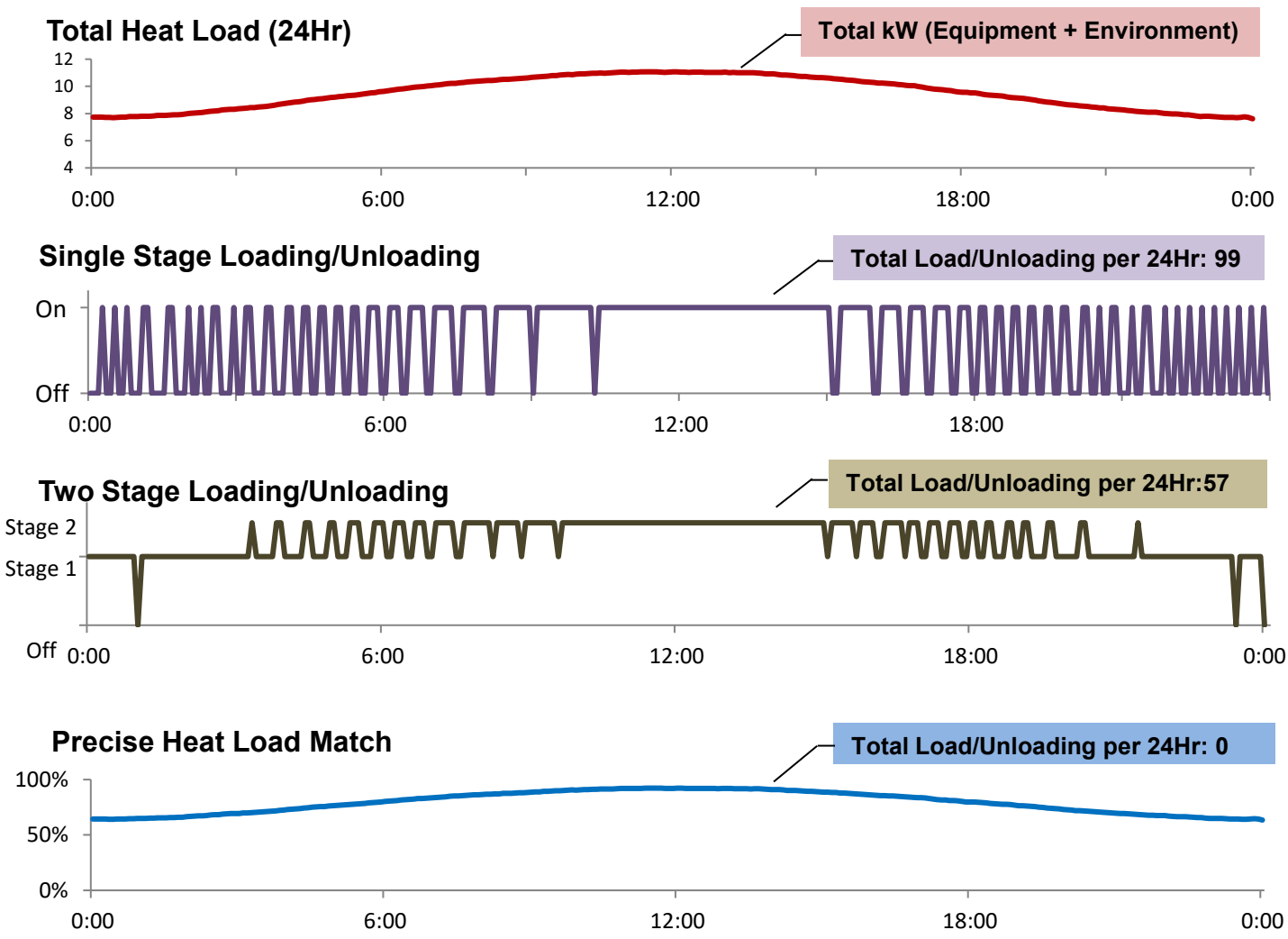

STANDARD FEATURES

Adaptive Free Cooling

Traditional wall-packaged unit controls typically use a fixed outdoor air temperature threshold to initiate free cooling, based on the indoor setpoint. Depending on the site's heat load, this fixed threshold may not provide optimal performance.

Adaptive free cooling addresses this limitation by automatically learning and retaining the optimal outdoor temperature points at which free cooling becomes viable. The system continuously adjusts these thresholds over time, maximizing free cooling hours without requiring operator intervention. This functionality is particularly valuable when site heat loads fluctuate, as the system adapts to establish new optimal free cooling setpoints dynamically.

Soft Start

Instead of sudden and numerous starts and stops, the compressor gradually ramps up capacity at startup and continuously modulates to match the shelter load. Advantages include:

- Minimizes mechanical stress during compressor startup**.**
- Eliminates voltage spikes at startup, reducing generator sizing requirements. Generators and transfer switches no longer need to be rated for Locked Rotor Amps, allowing use of smaller, more cost-efficient equipment.
- Reduced noise caused by sudden compressor loading.

Synchronized Cooling Mode

With the Variable Capacity systems, buildings equipped with one or more redundant HVAC units can utilize Synchronized Cooling Mode. In this mode, all available units operate at low speed rather than relying on a single lead unit to handle the entire load. For example, in a building with two units in a lead/lag configuration, instead of running the lead unit at 90% capacity, synchronized cooling will operate both units at 45% capacity. At partial load, efficiency is significantly higher, while compressor stress and noise are reduced to one-fourth. Redundancy remains intact: if one unit experiences a mechanical cooling failure, the other unit will ramp up to full capacity to maintain site temperature. This operating mode enables any building with redundant units to consistently achieve a high efficiency.

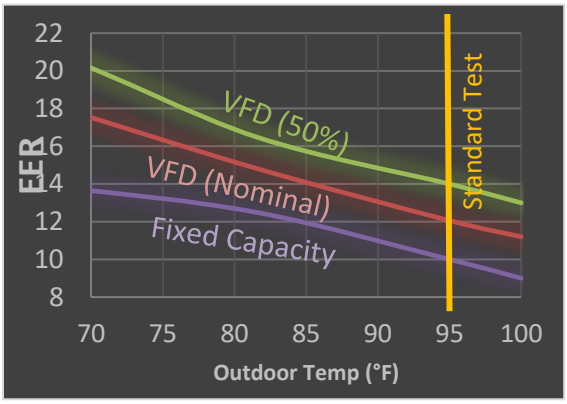

Turbo Boost Mode

In certain conditions, such as extremely high outdoor temperatures or sudden increases in internal heat load, the building's cooling demand may exceed the nominal capacity of the HVAC system. When this occurs, Turbo Boost Mode can automatically engage to deliver up to 125% of the system's nominal cooling capacity. This provides temporary additional cooling at the expense of a slight reduction in overall efficiency.

Quiet Mode

Quiet mode reduces operating noise by 10–14 dBA by limiting the maximum compressor frequency. When Quiet Mode is enabled, maximum cooling capacity is reduced by 15%, and Turbo Boost is disabled. This feature is ideal for noise-sensitive environments.

Fully Functional Standalone Mode

The system can operate in a fully functional Standalone Mode when communication is lost between the HVAC system and the central controller. This includes maintaining free cooling, mechanical cooling, dehumidification, and heating operation. This capability eliminates the controller as a single point of failure for the HVAC system.

Standard Features

Multi-Unit ASMUC.6 Controller

The Variable Capacity WPU is designed to operate with AIRSYS Multi-Unit Controller (ASMUC), which can control up to 6 units and up to 16 units when equipped with an extension module simultaneously. The controller can set up to 4 distinct control zones, each with their own temperature settings.

The ASMUC provides an overview page that displays the real-time operating status of all connected HVAC units. Detailed statuses of each temperature and pressure measurement are available directly on the controller, enabling accurate monitoring and efficient troubleshooting. All parameters are also accessible remotely through IP/SNMP, allowing both monitoring and adjustment of setpoints and other critical control parameters.

Settings are retained during power loss. Each unit also includes a Programmable Graphical Display (PGD) identical to the main controller function. If communication is lost, each unit operates independently using the last received settings and its onboard temperature and humidity sensors.

For local service, the ASMUC includes a micro-USB port for on-site software updates and for downloading alarm logs to a personal computer.

Performance Parameter Readout

The system provides real-time performance parameter readings to both the local controller display and remote monitoring platforms. This feature gives technicians a clear overview of system performance, significantly reducing troubleshooting and maintenance time. When combined with remote monitoring, it also enables predictive maintenance strategies that can lower costs and improve overall system reliability. Commonly monitored parameters include:

- Superheat
- Subcooling
- EEV Status
- Variable Compressor Capacity
- Discharge Pressure (High Pressure)
- Discharge Temperature
- Suction Pressure (Low Pressure)
- Suction Temperature

Power monitoring

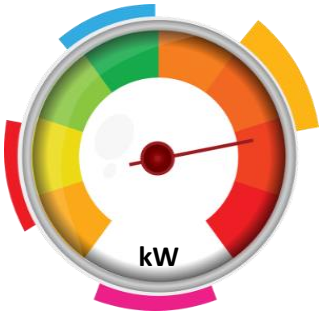

All variable capacity systems come with power monitoring tools that are displayed locally in addition to being available via remote access. This measurement includes instantaneous power consumption as well as 1-hour, 24-hour and 30-day average power consumption for each of the HVAC units. Power monitoring can be used to measure efficiencies across systems, regions, and networks, and can be used for predictive maintenance.

Standard Features

Condenser Heat Exchange Meter

The ability to reject heat through the condenser coil is a critical factor in HVAC system performance. Monitoring heat exchange efficiency at the condenser coil enables intelligent maintenance decisions. Whether caused by small leaves and sticks obstructing airflow or by dirt and grime accumulating on coil fins, the precision cooling system can indicate to the end user or service technician exactly how much heat exchange efficiency has been lost.

Air Filter Protection Device

The patented AIRSYS AFPD (Air Filter Protection Device) is field-proven and specifically engineered to protect air filters from excessive dust and debris loading. In environments such as sites near dirt roads, highways, farmland, or other sources of airborne particulates, the AFPD optimizes free cooling during periods of cleaner outdoor air. This extends the service life of the primary air filter while reducing maintenance costs. The result is improved energy efficiency and enhanced system reliability.

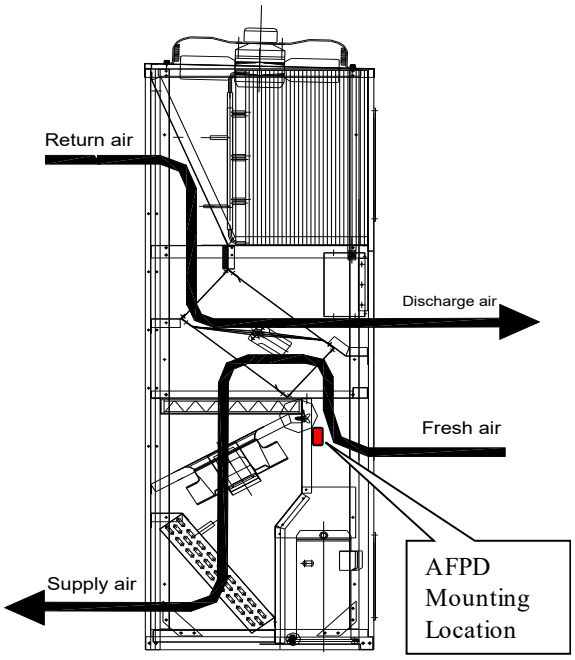

MODEL NUMBER NOMENCLATURE

1	2	3	4	5	6	7	8	9	10	11	12	13
11	V	1	T3	M	R410	A	AC	.	X	X	X	X

1	11	**Nominal kW** Total Cooling Capacity
2	V	**Compressor Type** V: Variable Capacity E: Fixed Capacity Scroll R: Fixed Capacity Rotary
3	1	**Compressor Qty** 1: 1 Variable Compressor 2: 1 Variable Compressor + 1 Fixed Compressor
4	T3	**Mechanical Package Code** B: Bottom Supply Package T: Top Supply Package The number following “B" or “T” denotes package size. See mechanical drawing for detail.
5	M	**Design Control Configuration** M: Designed for Multiple Unit Controller D: Designed for Dual (Lead/Lag) Controller S: Single Controller with PGD
6	R410	**Refrigerant** R410: R410A Refrigerant
7	A	**Primary Power Supply** A: 208/230V1PH 60Hz B: 208/230V3PH 60Hz C: 460V 3PH 60Hz D: 380V 3PH 50Hz E: 220V 1PH 50Hz
8	AC	**Supply Fan Power** AC: AC Powered EC Fan DC: DC Powered EC Fan
9	.	Separator Character “. “
10	X	**Custom Color Options** X: Mesa Tan (Default) G: Light Gray W: White B: Matte Black
11	X	**Custom Coating Options** X: Polyurethane Coated Panel and Frame + Coated Evaporator Coil (Default) C: Default + Blygold Condenser Coil Coating+ Stainless Steel Fasteners E: Option C + Stainless Steel Panel and Frame P: Option X + Epoxy Coating for Condenser Fin Coil
12	X	**Custom Filters Options** X: MERV8 (Default) 1: MERV 11 (F5) 2: MERV 13 (F7)
13	X	**Custom Heater options** X: 5kW Heater 0: No heater

Note: Not all capacity, package, and power options are compatible. See the table below for all available options. Reach out to AIRSYS for questions regarding customization. Additional lead-time and minimum order size may be required for custom options.

Nominal Cooling Performance (AHRI 390)

Model	Nominal Tonnage	Nominal Total Capacity	EER	IEER
7V1B2MR410AAC	1 - 2.5 Ton Variable	7.2 kW / 24,600 BTUH	11.5	18.4
11V1B3MR410AAC	2 - 4 Ton Variable	10.6 kW / 36,000 BTUH	11.0	19.4
11V1B3MR410ADC	2 - 4 Ton Variable	10.3 kW / 35,200 BTUH	11.0	18.5
11V1B3MR410CAC	2 - 4 Ton Variable	10.3 kW / 35,200 BTUH	11.5	18.4
11V1T3MR410AAC	2 - 4 Ton Variable	10.2 kW / 34,800 BTUH	11.0	19.4
15V1B4MR410AAC	3 - 6 Ton Variable	15.1 kW / 51,500 BTUH	11.5	17.9
15V1B4MR410BAC	3 - 6 Ton Variable	15.1 kW / 51,500 BTUH	11.5	18.4
15V1B4MR410CAC	3 - 6 Ton Variable	15.4 kW / 52,500 BTUH	11.4	19.4
15V1B4MR410CDC	3 - 6 Ton Variable	14.4 kW / 49,000 BTUH	11.0	20.2
15V1T4MR410AAC	3 - 6 Ton Variable	14.8 kW / 50,500 BTUH	11.0	17.9
15V1T4MR410BAC	3 - 6 Ton Variable	15.1 kW / 51,500 BTUH	11.0	17.9
28V2B5MR410AAC	3 - 10 Ton Variable	28.1 kW / 96,000 BTUH	10.3	19.4
28V1B5MR410BAC	4 - 10 Ton Variable	28.1 kW / 96,000 BTUH	11.5	19.4
28V1B5MR410CAC	4 - 10 Ton Variable	28.1 kW / 96,000 BTUH	11.0	19.4

Note: All Capacities, EER, and IEER are certified to AHRI 390-2021 testing standard.

Nominal Cooling Performance (ASHRAE 127)

Model	Nominal Sensible Capacity	SCOP
7V1B2MR410AAC	6.0 kW / 20,600 BTUH	3.70
11V1B3MR410AAC	8.5 kW / 29,000 BTUH	3.66
11V1B3MR410ADC	8.6 kW / 29,200 BTUH	3.67
11V1B3MR410CAC	8.5 kW / 29,000 BTUH	3.37
11V1T3MR410AAC	8.5 kW / 29,000 BTUH	3.62
15V1B4MR410AAC	13.2 kW / 45,000 BTUH	3.47
15V1B4MR410BAC	12.0 kW / 41,000 BTUH	3.47
15V1B4MR410CAC	12.5 kW / 42,500 BTUH	3.49
15V1B4MR410CDC	12.1 kW / 41,300 BTUH	3.42
15V1T4MR410AAC	12.5 kW / 42,500 BTUH	3.42
15V1T4MR410BAC	12.0 kW / 41,000 BTUH	3.49
28V2B5MR410AAC	23.7 kW / 81,000 BTUH	3.41
28V1B5MR410BAC	23.3 kW / 79,500 BTUH	3.40
28V1B5MR410CAC	23.4 kW / 80,800 BTUH	3.41

- Capacities and SCOP are rated as the ASHRAE 127 standard for air-cooled units.
- All data were tested and analyzed at 95°F outdoor temperature and 80°F/67°F indoor return temperature under DB/WB conditions.

VARIABLE SPEED COMPRESSOR CAPACITY DATA

Model	Return Temp. (DB/WB)	Min Total Capacity		Max Total Capacity		Min Sensible Capacity		Max Sensible Capacity	
		kW	BTUH	kW	BTUH	kW	BTUH	kW	BTUH
7V1B2MR410AAC	80/67°F	3.6	12,200	8.9	30,400	2.6	8,800	7.4	25,400
	86/69°F	3.7	12,600	9.2	31,400	2.6	9,000	8.5	29,100
	95/72°F	3.9	13,300	9.7	33,300	3.0	10,200	9.7	33,000
11V1B3MR410AAC	80/67°F	7.5	25,600	14.1	48,000	6.4	22,000	10.3	35,200
	86/69°F	7.7	26,400	14.5	49,500	6.6	22,500	11.9	40,600
	95/72°F	8.2	28,000	15.4	52,500	7.5	25,600	13.6	46,400
11V1B3MR410ADC	80/67°F	5.5	18,800	15.5	52,800	4.7	16,200	12.8	43,600
	86/69°F	5.7	19,600	15.6	53,200	4.9	16,700	14.4	49,000
	95/72°F	6.2	21,200	16.4	56,200	5.7	19,400	15.3	52,100
11V1B3MR410CAC	80/67°F	7.5	25,600	14.1	48,000	6.4	22,000	10.3	35,200
	86/69°F	7.9	26,800	14.5	49,400	6.5	22,300	11.9	40,500
	95/72°F	8.2	28,100	15.3	52,300	7.4	25,300	13.5	46,000
11V1T3MR410AAC	80/67°F	7.0	24,000	14.1	48,000	6.7	22,800	10.4	35,400
	86/69°F	7.3	24,800	14.5	49,500	6.3	21,500	12.0	40,900
	95/72°F	7.7	26,300	15.4	52,500	7.1	24,200	13.6	46,500
15V1B4MR410AAC	80/67°F	12.5	42,500	17.7	60,500	10.2	34,800	14.5	49,500
	86/69°F	12.7	43,400	18.1	61,700	10.4	35,600	15.2	51,800
	95/72°F	13.1	44,600	19.1	65,200	11.8	40,300	17.8	61,000
15V1B4MR410BAC	80/67°F	8.8	30,000	17.7	64,500	6.3	21,400	14.5	49,500
	86/69°F	9.0	30,800	18.1	65,700	6.5	22,100	15.0	51,300
	95/72°F	9.4	32,200	19.1	69,200	7.0	23800	17.7	60,500
15V1B4MR410CAC	80/67°F	8.1	27,600	18.8	64,000	5.8	19,800	14.3	49,000
	86/69°F	8.3	28,400	19.1	65,200	6.3	20,600	14.9	51,100
	95/72°F	8.7	29,700	20.1	68,600	7.4	25,500	17.7	60,300
15V1B4MR410CDC	80/67°F	10.0	34,100	17.0	58,000	8.7	29,700	14.5	49,500
	86/69°F	10.3	35,100	17.4	59,400	8.9	30,400	15.1	51,500
	95/72°F	10.6	36,200	18.3	62,400	10.3	35,100	17.7	60,400
15V1T4MR410AAC	80/67°F	12.5	42,500	17.0	58,000	10.2	34,800	13.9	47,500
	86/69°F	12.7	43,200	17.4	59,200	10.4	35,500	14.5	49,500
	95/72°F	13.1	44,600	18.3	62,500	11.2	38,100	15.1	51,400
15V1T4MR410BAC	80/67°F	10.6	36,100	17.7	60,500	8.7	29,700	14.5	49,500
	86/69°F	10.8	36,900	18.1	61,700	8.9	30,400	15.1	51,500
	95/72°F	11.2	38,200	19.1	65,200	10.3	35,100	17.7	60,400
28V2B5MR410AAC	80/67°F	9.5	32,400	33.1	113,000	8.3	30,800	28.0	96,000
	86/69°F	9.8	33,600	34.3	117,000	8.5	29,000	29.9	102,000
	95/72°F	10.3	35,300	36.2	124,000	9.7	33,100	34.2	117,000
28V1B5MR410BAC	80/67°F	16.4	56,000	39.0	133,000	12.5	42,500	28.4	97,000
	86/69°F	17.0	58,100	40.4	138,000	14.4	49,100	32.8	112,000
	95/72°F	17.9	61,000	42.6	145,000	16.3	55,600	37.5	128,000
28V1B5MR410CAC	80/67°F	16.3	55,500	37.2	127,000	14.1	48,000	30.1	105,500
	86/69°F	16.9	57,600	38.5	131,000	14.3	48,800	33.5	114,200
	95/72°F	17.7	60,500	40.7	139,000	16.2	55,300	38.5	131,200

- All Data all given at 95°F outdoor temperature. For outdoor temperatures higher than 95°, de-rate capacity by 4% for every 5°F above 95°F, up to 120°F.
- For high altitude installation, de-rate capacity by approximately 1% for every 1000 ft above 1000 ft. Contact manufacturer for installations above 6500 ft.

Free Cooling Capacity

Model	ΔT = 5°F		ΔT = 10°F		ΔT = 15°F		ΔT = 20°F	
	kW	BTUH	kW	BTUH	kW	BTUH	kW	BTUH
7V1B2MR410AAC	2.1	7100	4.2	14300	6.3	21300	9.8	26500
11V1B3MR410AAC	2.5	8500	5.0	17000	7.5	25600	10.0	34100
11V1B3MR410ADC	2.5	8500	5.0	17000	7.5	25600	10.0	34100
11V1B3MR410CAC	2.6	8800	5.1	17500	7.7	26200	10.1	35000
11V1T3MR410AAC	2.8	9500	5.6	19000	8.4	28500	15.6	38100
15V1B4MR410AAC	3.9	13300	7.8	26600	11.7	39900	15.7	53200
15V1B4MR410BAC	3.9	13400	7.9	26900	11.8	40200	16.3	53700
15V1B4MR410CAC	4.1	13900	8.1	27800	12.2	41700	11.3	55600
15V1B4MR410CDC	4.1	13900	8.1	27800	12.2	41700	11.3	55600
15V1T4MR410AAC	4.4	15000	8.8	30000	13.2	45000	17.6	60000
15V1T4MR410BAC	3.9	13400	7.9	26900	11.8	40200	16.3	53700
28V2B5MR410AAC	6.8	23200	13.6	46400	20.4	69600	29.9	92800
28V1B5MR410BAC	7.5	25500	14.9	51000	22.4	76500	30.1	101900
28V1B5MR410CAC	9.3	31700	18.6	63400	27.9	95100	37.1	126900

Airflow Ratings

Model	CFM (Wet Coil and dry Coil Conditions)							
	0.0 in. w.c. (0Pa)		0.1 in. w.c. (25Pa)		0.2 in. w.c. (50Pa)		0.3 in. w.c. (75Pa)	
7V1B2MR410AAC	1230	1255	1210	1230	1180	1210	1160	1180
11V1B3MR410AAC	1470	1495	1440	1470	1410	1440	1380	1410
11V1B3MR410ADC	1640	1665	1610	1630	1580	1600	1540	1570
11V1B3MR410CAC	1550	1575	1520	1540	1490	1510	1460	1480
11V1T3MR410AAC	1640	1665	1610	1630	1580	1600	1540	1570
15V1B4MR410AAC	2290	2320	2220	2250	2150	2180	2090	2120
15V1B4MR410BAC	2350	2380	2280	2310	2210	2240	2140	2170
15V1B4MR410CAC	2170	2200	2100	2130	2040	2070	1980	2010
15V1B4MR410CDC	2000	2030	1940	1970	1880	1910	1830	1850
15V1T4MR410AAC	2580	2610	2500	2530	2430	2460	2350	2380
15V1T4MR410BAC	2410	2440	2340	2370	2270	2300	2200	2230
28V2B5MR410AAC	4410	4460	4230	4280	4060	4110	3900	3950
28V1B5MR410BAC	4410	4460	4230	4280	4060	4110	3900	3950
28V1B5MR410CAC	5470	5520	5250	5300	5040	5090	4840	4880

TECHNICAL DETAILS

Model	Compressor	Evaporator Fan		Condenser Fan		Electric Heater		Refrigerant	Noise (3)	
	Current (A)	Current (A) (1)	Air Volume (CFM) (2)	Current (A) (1)	Air Volume (CFM) (2)	Capacity (kW)	Current (A)	Weight (lbs)	Nominal (dB)	Quiet Mode (dB)
7V1B2MR410AAC	7.5	0.8	1230	1.0	2230	5	21.7	6.8	63	54
11V1B3MR410AAC	9.6	7.5	1470	2.2	3820	5	21.7	8.2	65	56
11V1B3MR410ADC	9.3	7.5	1640	2.8	3700	5	21.7	8.8	65	56
11V1B3MR410CAC	3.1	1.5	1550	0.4	4940	5	6.3	8.2	65	56
11V1T3MR410AAC	2.2	1.7	1640	2.0	4110	5	21.7	11.7	66	56
15V1B4MR410AAC	14.7	3.0	2290	1.8	4580	5	21.7	10.1	65	56
15V1B4MR410BAC	9.1	1.8	2350	1.8	4580	5	12.6	10.1	65	56
15V1B4MR410CAC	4.7	2.1	2170	0.4	4940	5	6.3	10.1	65	56
15V1B4MR410CDC	4.7	8.0	2000	1.0	4940	5	6.3	10.1	65	56
15V1T4MR410AAC	14.6	2.5	2580	2.9	4880	5	21.7	12.3	66	57
15V1T4MR410BAC	16.8	2.8	2410	2.0	4410	5	12.6	12.3	66	57
28V2B5MR410AAC	5.2 & 3.9	6.5	4410	1.5	10000	5	21.7	12.6 & 13	68	62
28V1B5MR410BAC	16.8	4.6	4410	2.6	10000	5	12.6	33.0	67	57
28V1B5MR410CAC	8.8	1.3	5470	0.8	10000	5	6.3	33.0	67	57

(1) All electric current values are given at rated capacity for safety, not at the potential maximum.
(2) All air volume values are given at max capacity for continuous operation, and the units are equipped with standard pleated filters
(3) Ambient Temperature: 95°F, 6.5 ft away from unit in open space.

ELECTRICAL RATINGS

Model	Circuit #1				Circuit #2			
	AC or DC		48 VDC		AC or DC		48 VDC	
	MCA	MFS	MCA	MFS	MCA	MFS	MCA	MFS
7V1B2MR410AAC	28.7	30	--	--	--	--	--	--
11V1B3MR410AAC	29	40	--	--	--	--	--	--
11V1B3MR410ADC	27.2	40	10.7	15	--	--	--	--
11V1B3MR410CAC	11.1	15	--	--	--	--	--	--
11V1T3MR410AAC	29.3	40	--	--	--	--	--	--
15V1B4MR410AAC	35.8	50	--	--	--	--	--	--
15V1B4MR410BAC	21.8	30	--	--	--	--	--	--
15V1B4MR410CAC	12.6	15	--	--	--	--	--	--
15V1B4MR410CDC	15	20	10	15	--	--	--	--
15V1T4MR410AAC	34.2	50	--	--	--	--	--	--
15V1T4MR410BAC	22	30	--	--	--	--	--	--
28V2B5MR410AAC	44.3	60	--	--	27.2	35	--	--
28V1B5MR410BAC	23.9	25	--	--	43.7	70	--	--
28V1B5MR410CAC	24.8	35	--	--	--	--	--	--

MCA = Minimum Circuit Ampacity
MFS = Maximum Fuse Size (or HACR Breaker if it meets the same maximum current limit)

FILTER SIZES

Model	Filter Quantity	Nominal Size (in)	Exact Size (in)
7V1B2MR410AAC	1	18 x 25 x 2	17-1/2 x 24-1/2 x 1-3/4
11V1B3MR410AAC	2	16 x 16 x 2	15-1/2 x 15-1/2 x 1-3/4
11V1B3MR410ADC	2	16 x 16 x 2	15-7/8 x 15-7/8 x 1-3/4
11V1B3MR410CAC	2	16 x 16 x 2	15-1/2 x 15-1/2 x 1-3/4
11V1T3MR410AAC	2	16 x 16 x 4	15-7/8 x 15-7/8 x 3-3/4
15V1B4MR410AAC	2	18 x 20 x 2	17-1/2 x 19-1/2 x 3-3/4
15V1B4MR410BAC	2	18 x 20 x 2	17-1/2 x 19-1/2 x 3-3/4
15V1B4MR410CAC	2	18 x 20 x 2	17-1/2 x 19-1/2 x 3-3/4
15V1B4MR410CDC	2	18 x 20 x 2	17-1/2 x 19-1/2 x 3-3/4
15V1T4MR410AAC	2	18 x 20 x 4	17-7/8 x 19-7/8 x 3-3/4
15V1T4MR410BAC	2	18 x 20 x 4	17-7/8 x 19-7/8 x 3-3/4
28V2B5MR410AAC	2	24 x 24 x 4	23-3/8 x 23-3/8 x 3-3/4
28V1B5MR410BAC	2	24 x 24 x 4	23-3/8 x 23-3/8 x 3-3/4
28V1B5MR410CAC	2	24 x 24 x 4	23-3/8 x 23-3/8 x 3-3/4

DIMENSIONS

MODEL: 7V1B2

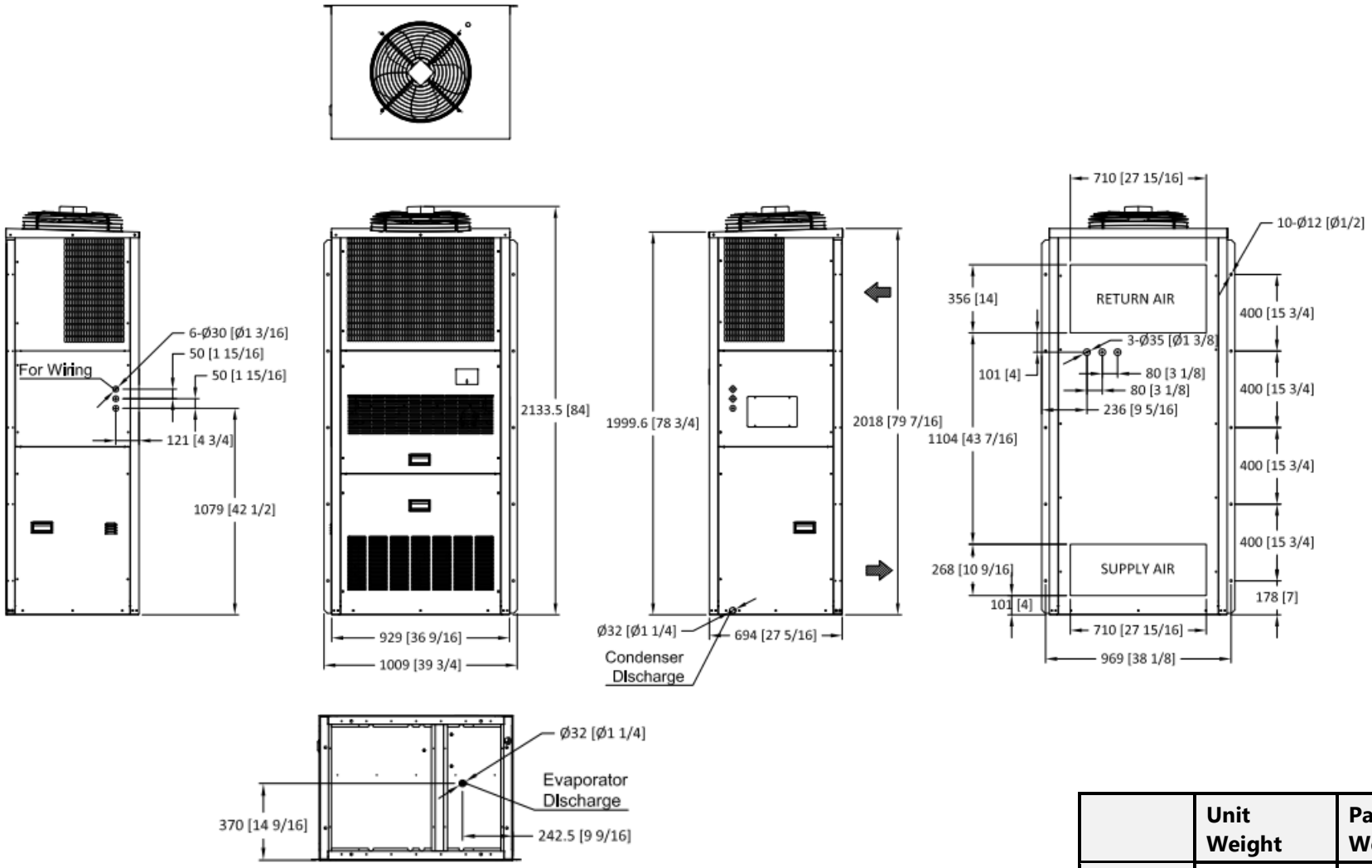

	Unit Weight	Package Weight
lbs.	504	558
kg	229	253

DIMENSIONS

MODEL: 11V1B3

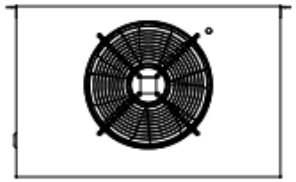

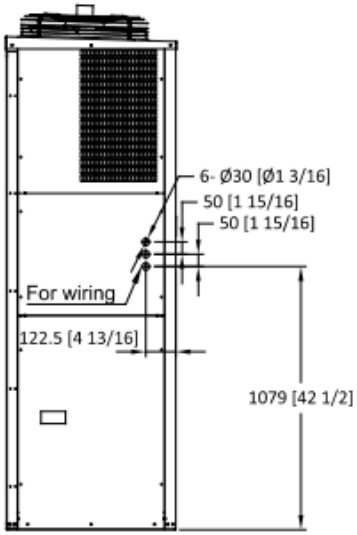

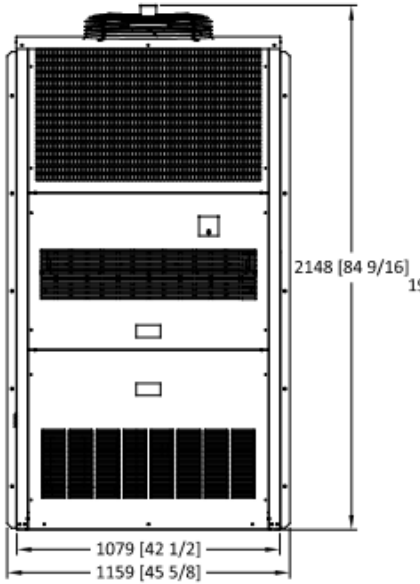

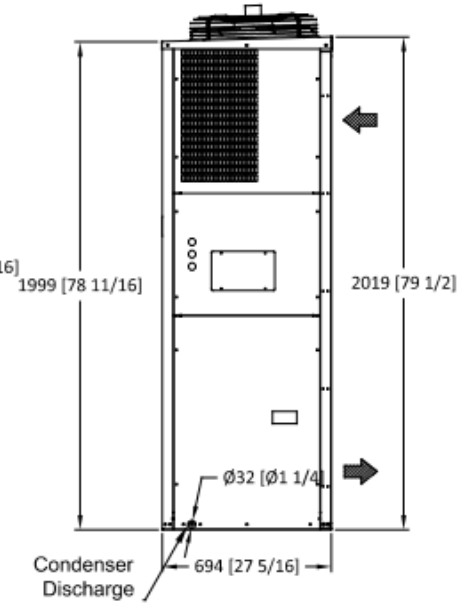

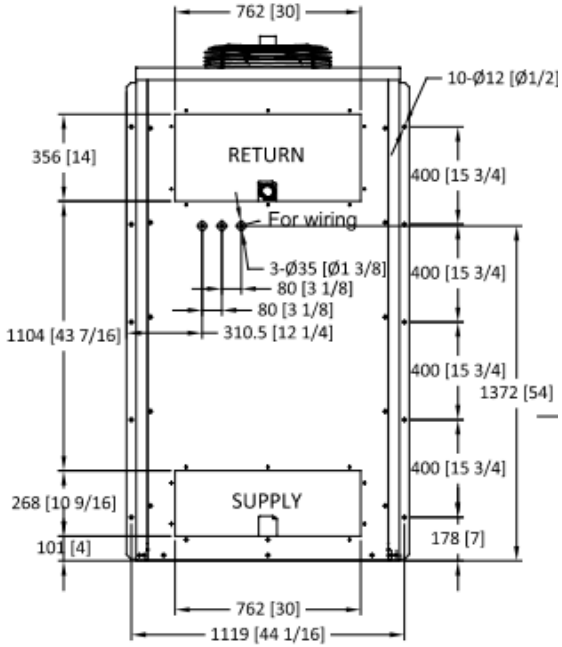

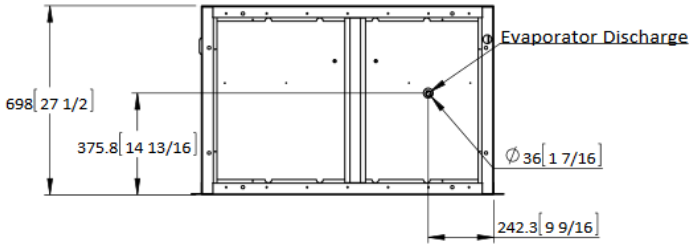

	Unit Weight	Package Weight
lbs.	633	686
kg	287	311

DIMENSIONS

MODEL: 11V1T3

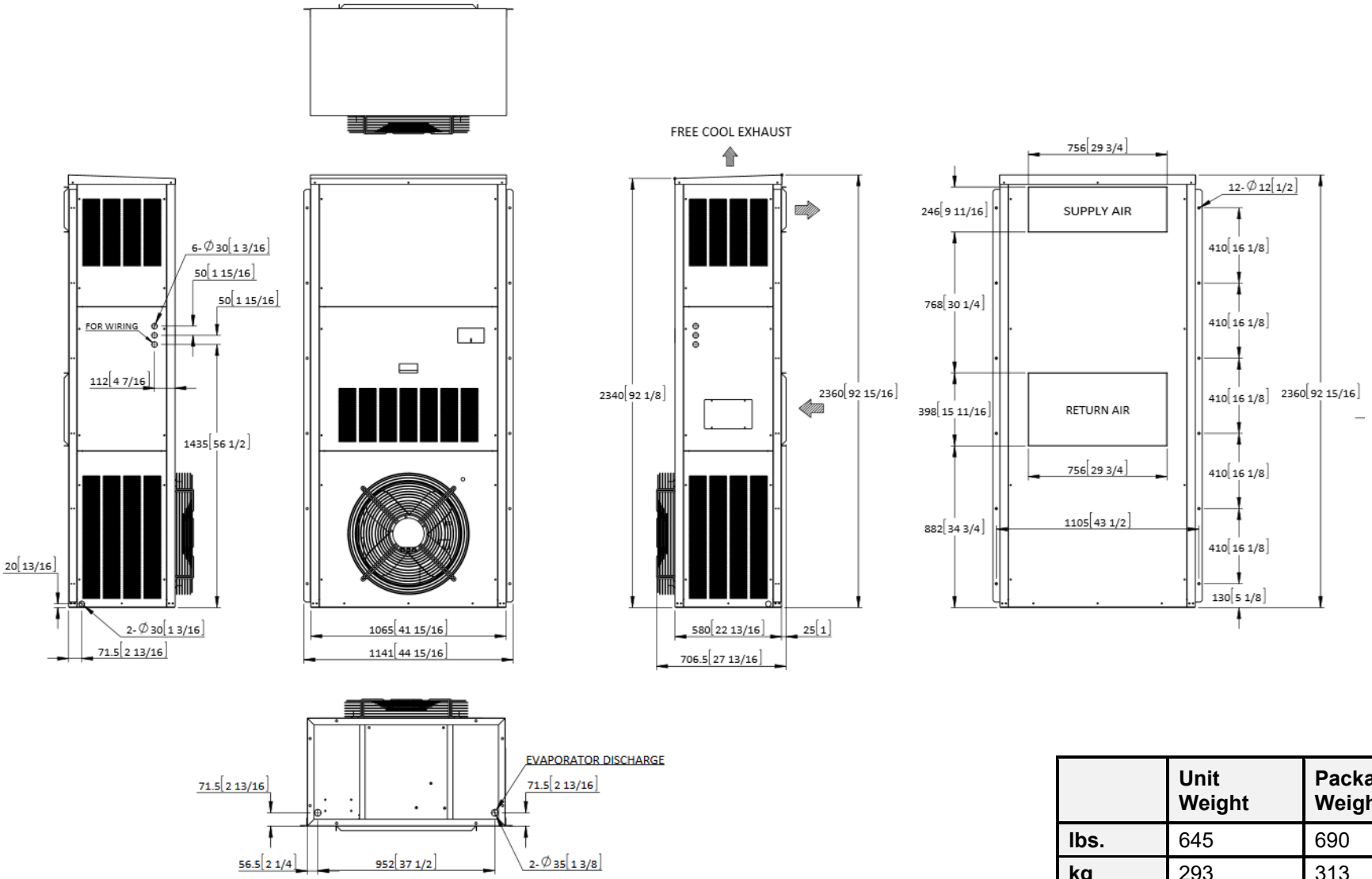

	Unit Weight	Package Weight
lbs.	645	690
kg	293	313

DIMENSIONS

MODEL: 15V1B4

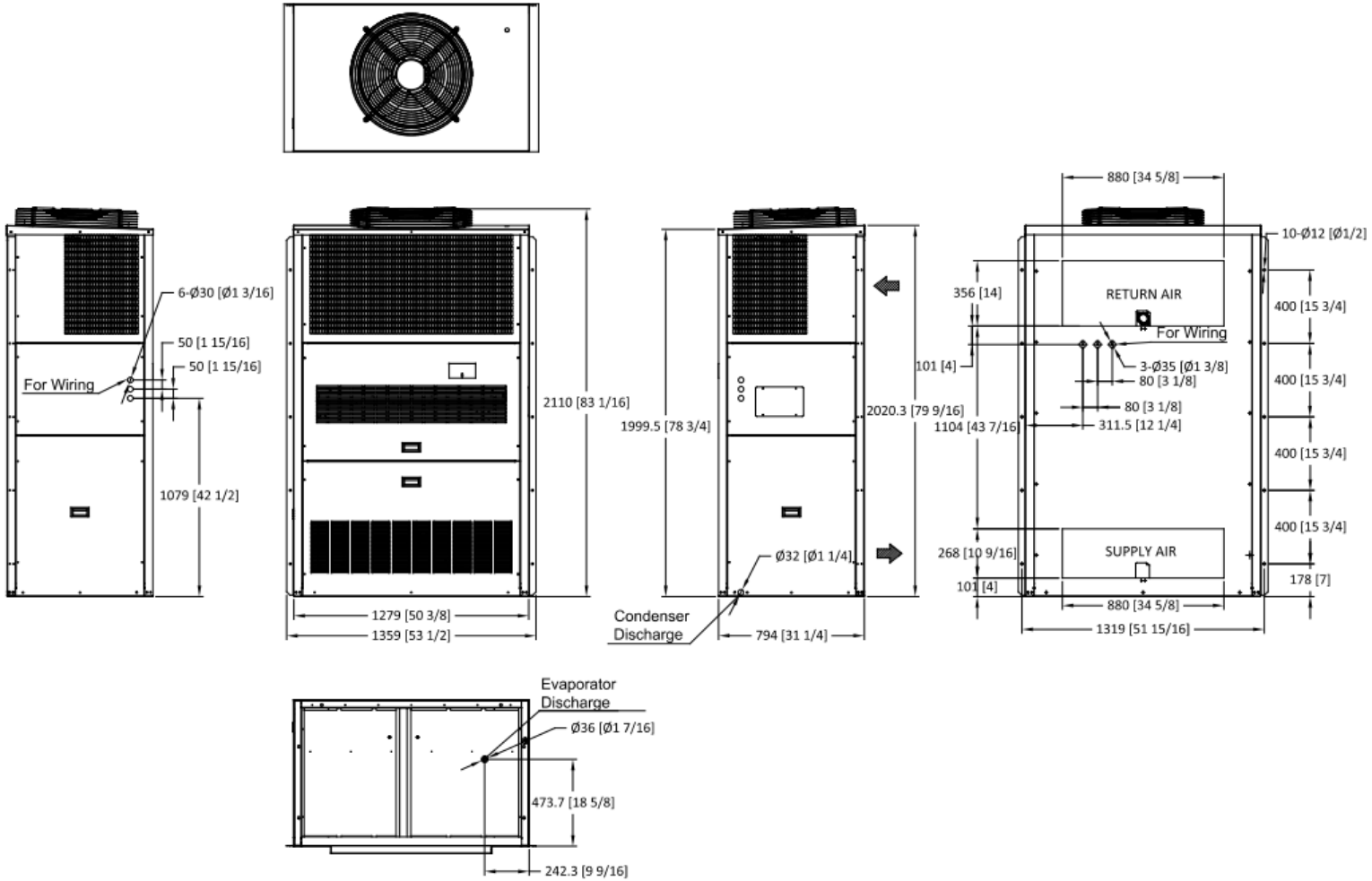

	Unit Weight	Package Weight
lbs.	838	904
kg	380	410

DIMENSIONS

MODEL: 15V1T4

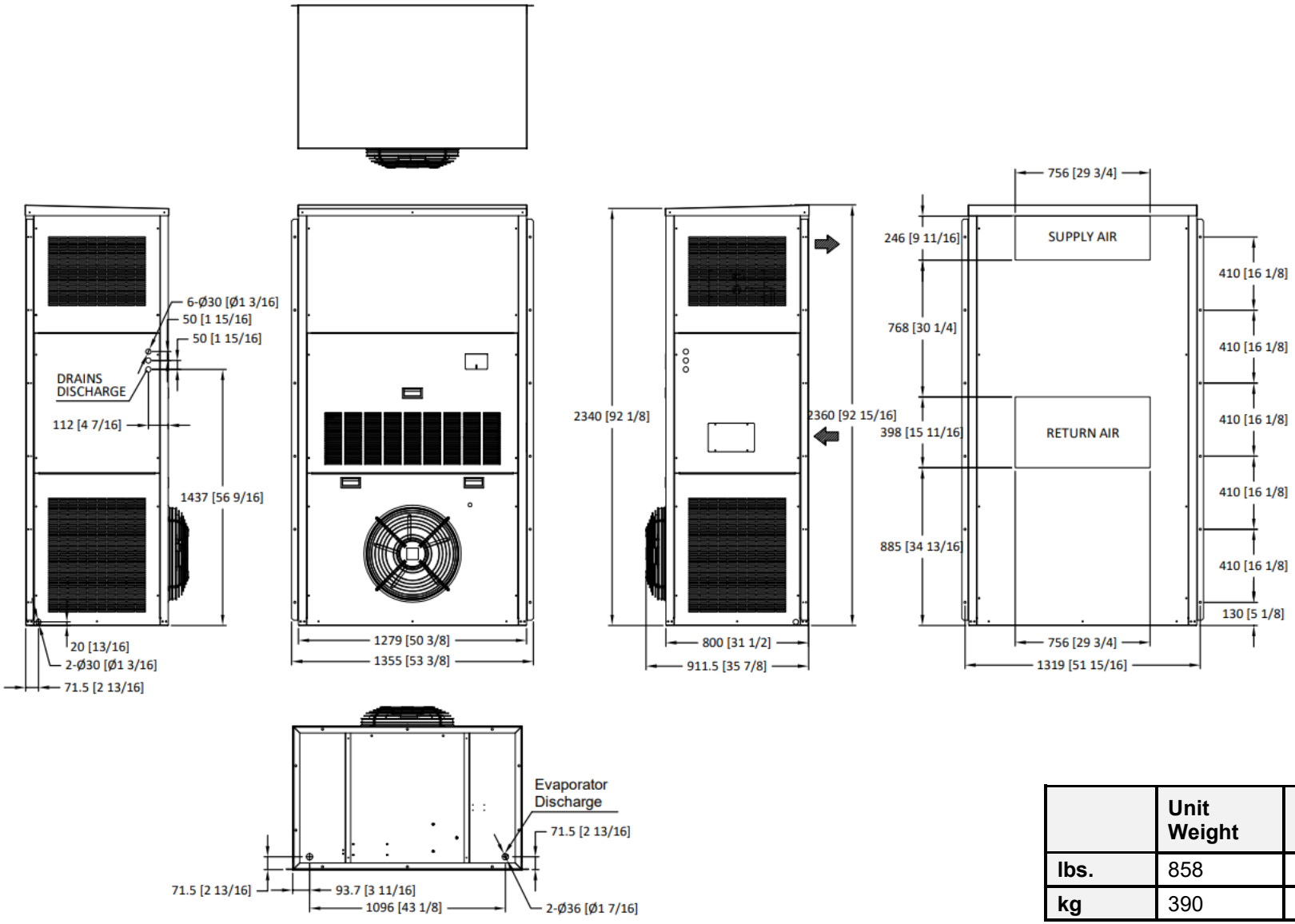

	Unit Weight	Package Weight
lbs.	858	924
kg	390	420

DIMENSIONS

MODEL: 28V1B5/28V2B5

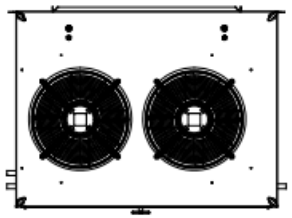

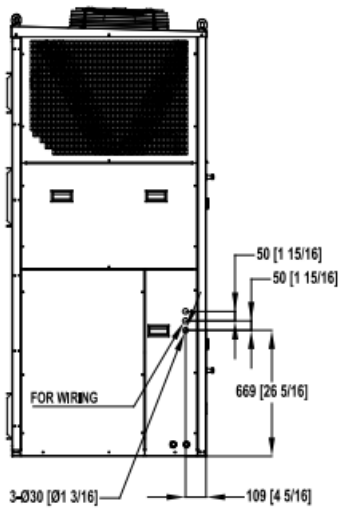

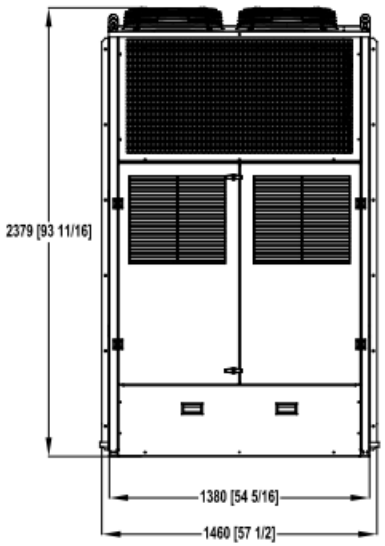

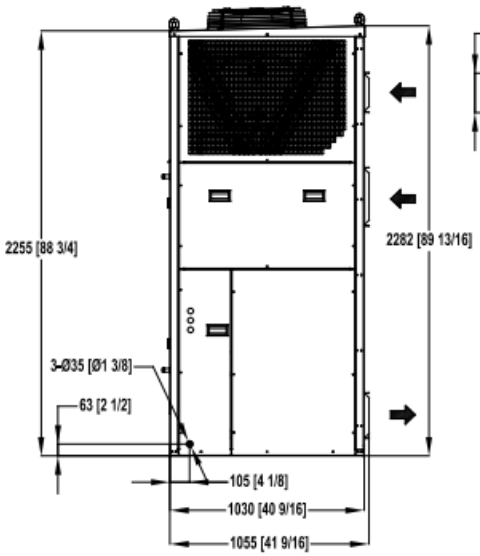

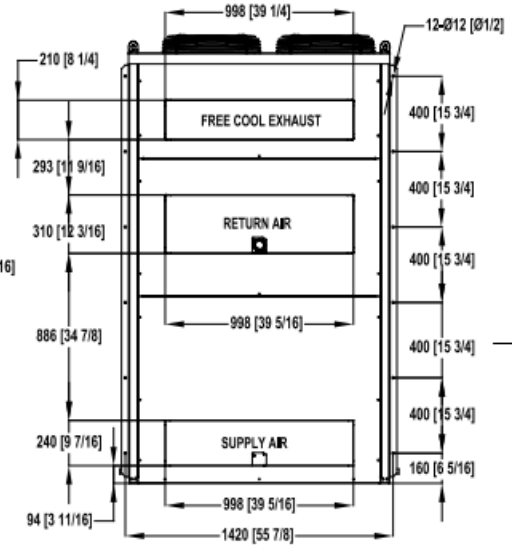

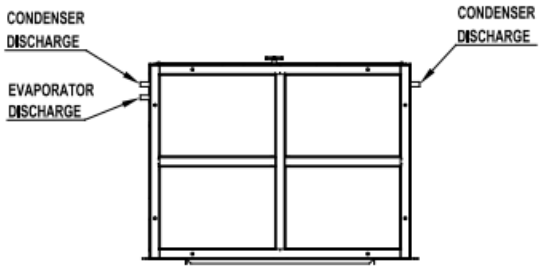

	Unit Weight		Ship Weight	
	28V1B5	28V2B5	28V1B5	28V2B5
lbs.	1300	1393	1367	1459
kg	590	632	620	662

DIMENSIONS
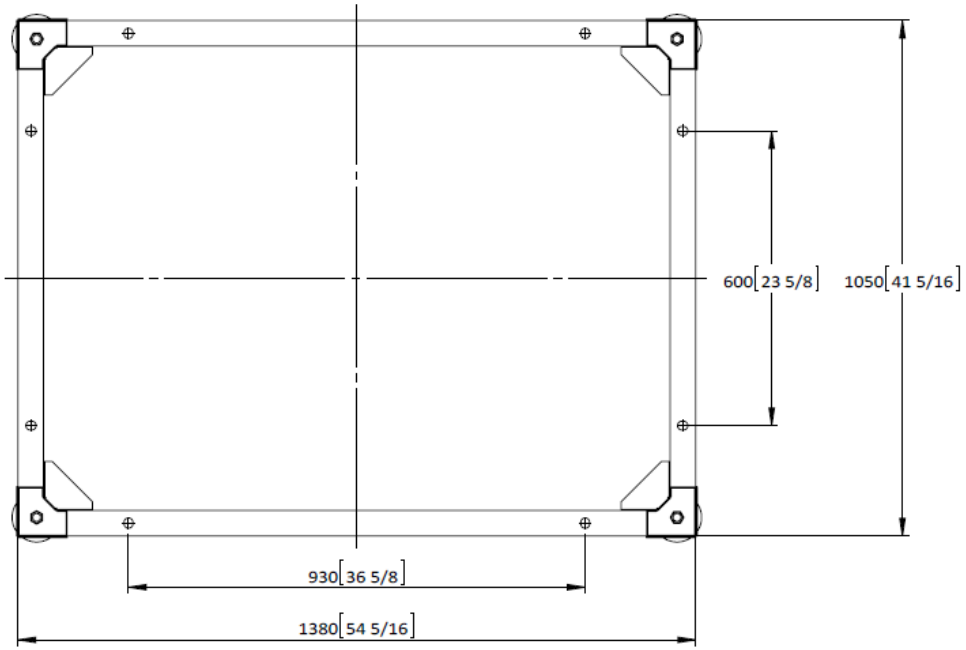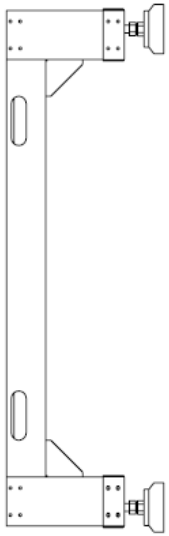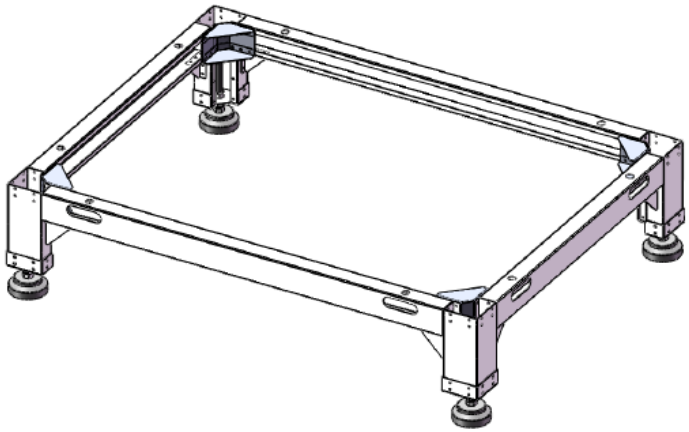
28V1B5/28V2B5 ADJUSTABLE STAND